210 Air-Cooled Argon Laser System

Features

- Superior Beam Quality
- Low Noise
- Internal Mirror Design
- Extended Lifetimes
- Drop-in Tube Replacement
- Designed for Fiber Optic Delivery
- Exceptional Warranty

Design

The 210 argon laser has been engineered to meet today's most demanding needs in OEM applications. Offered in an industry standard rectangular package, the 210 provides unparalleled beam quality that is constant across output power levels and through fiber delivery systems. The 210 is also available with a remote cooling option for applications where fan vibration is a concern. The 210 also offers improved thermal stability, longer life and exceptionally low noise.

Quality

The 210 draws upon years of experience and proven results with major OEM's worldwide. Utilized in life science, image recording and research applications, the 210 has effectively proven to reduce warranty retuns and increase lifetimes. The laser incorporates the latest in internal mirror tube technology assuring permanent beam alignment and eliminating contamination. NLC's design permits ease of servicing and simple, drop-in laser tube replacement.

210 Laser Head

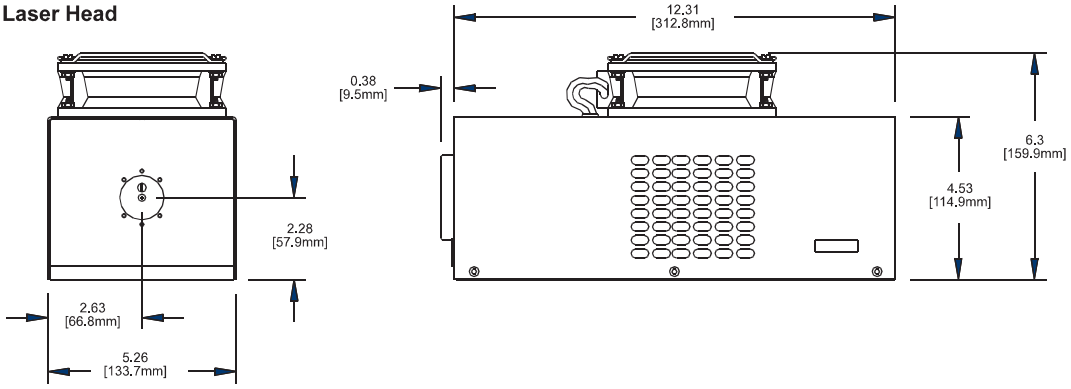

Power Supply

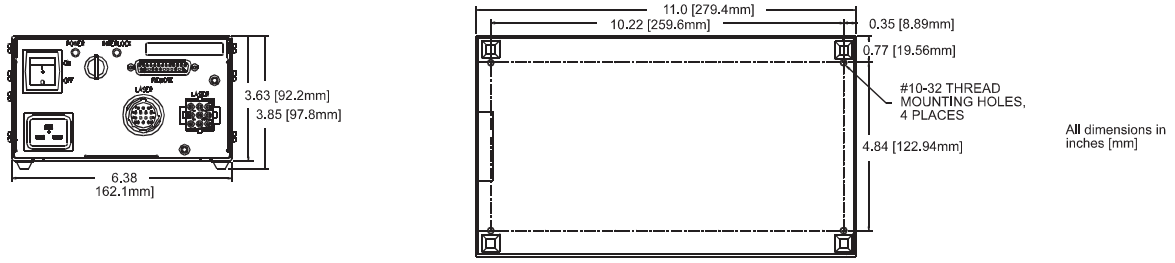

NATIONAL™ LASER COMPANY

210 Specifications

Applications

- Flow Cytometry
- DNA Sequencing
- Confocal Microscopy
- Spectroscopy
- Hematology
- Medical Detection Equipment
- Photo Finishing
- Ultra High Speed Laser Printing
- Graphic Arts
- Semiconductor Inspection
- Basic Research

Product Specifications[1,2,3]	**210DB**	**210BL**	**210GL**	**210AL**
Wavelength	458nm	488nm	514nm	458-514nm
Output Power	5mW	15,20,30mW	10,15,20mW	25,40,65mW
Power Stability (over 2 hours)	±1%	±1%	±1%	±1%
Spatial Mode	TEM_{00}	TEM_{00}	TEM_{00}	TEM_{00}
M^2	≤1.2	≤1.2	≤1.2	≤1.2
Beam Diameter @ $1/e^2$ (mm)	0.63±5%	0.65±5%	0.67±5%	0.67±5%
Beam Divergence (mrad)	<1.0	<1.0	<1.0	<1.0
Polarization Ratio	>250:1	>250:1	>250:1	>250:1
Pointing Stability over 2 hours (µrad)	±30/±3°C	±30/±3°C	±30/±3°C	±30/±3°C
Noise (20Hz - 2kHz peak to peak)	0.1%	0.1%	0.1%	0.1%
Noise (20Hz - 20kHz peak to peak)	1.0%	1.0%	1.0%	1.0%
Noise (20Hz - 2MHz rms)	1.0%	1.0%	1.0%	1.0%
Operating Parameters				
Voltage (Universal Input)	100-240VAC±10%			
Current	16 Amps Max.			
Frequency	47-63 Hz			
Phase	Single			
Air Intake (Standard, Large, Remote Cooling[4])	106, 225, 65 CFM			
Air Intake Clearance	2.5cm (1in)			
Operating Temperature / Humidity	4-40°C (40-105°F) / ≤90%			
Storage Temperature / Humidity	-30-60°C (-22-140°F) / ≤100%			
Warm-up Period	10 min.			
Dimensions				
Laser Head	12.69" x 5.26" x 6.3"			
Power Supply	11" x 6.38" x 3.85"			
Weights				
Laser Head (Std, Lrg, Remote Fan)[5]	10.8, 12.5, 9.5 lbs (4.9, 5.7, 4.3 kg)			
Power Supply	7 lbs (3.18 kg)			

Notes
1. Specifications subject to change without notice.
2. When used with LDI 9400 or NLC 2200 series power supply.
3. Measurements taken in light control after 5 minute warm-up.
4. Nominal air flow is 65 CFM. Use McLean Engineering Model INB412 or equivalent fan rated for 185 CFM free air flow and 1.8 inches of water. Hose length not to exceed two meters.
5. Large fan required for 30, 20, & 65mW @ 488, 514, & 458-514nm options.

NATIONAL LASER COMPANY™
National Laser Company
175 West 2950 South
Salt Lake City, Utah 84115 USA
Tel: 801 467-3391 Fax: 801 467-3394
Email: laser@nationallaser.com
www.nationallaser.com

12/2009 • Doc # 4.4.2.A.WI.mk.0006 Rev. I